FRONTIER™ 5515&5515R

High-Speed Micro Centrifuges



Smooth and Dependable High-Speed Micro Centrifuges for Liquid Separation Applications

Frontier 5515 and 5515R Benchtop Micro Centrifuges provide high-speed operation for a wide variety of tube volumes and capacities. With refrigeration capabilities (FC5515R), 10 acceleration/deceleration settings and multiple safety features, the FC5515 and FC5515R ensure stable liquid separation for applications requiring high-speed operation in molecular and cell biology, clinical, research and industrial applications.

Unique Features:

- Excellent functionality when used with rotors compatible with high throughput and BIOSEALS options for 1.5/2.0 ml or 5 ml microtubes, spin columns, and cryo tubes. Additionally, when equipped with the appropriate rotor options, these centrifuges can also be used in diagnostic settings for hematocrit capillaries and PCR tubes/strips.
- Designed for ease of operation, Frontier Micro centrifuges feature convenient control on an intuitive interface, which allows for responsive operation – even when wearing gloves.
- Enclosing all their functionalities within a small footprint, Frontier Micro centrifuges save valuable space on the lab bench.

Distributed by:
Safety Emporium
PO Box 1003
Blackwood, NJ 08012
Ph: (866) 326-5412 toll-free
Fax: (856) 553-6154
esupport@safetyemporium.com
www.safetyemporium.com

FRONTIER™ 5515&5515R *High-Speed Micro Centrifuges*

Easy-to-Use Control Panel



- Easy-to-turn rotary knob for parameter adjustments
- Waterproof keypad provides protection that helps significantly increase the lifespan of the product
- One-touch toggling between speed, G-force, and temperature controls (R model only)
- LCD display with light blue backlight which projects information in real-time
- View and adjust user parameters from the main screen; no need to navigate through sub-screens

High-Performance Driven by Sophisticated Technology



- Powerful induction motor reaches speeds up to 15200 RPM in less than 16 seconds
- Maximum G-force of 21953 RCF
- 10 acceleration/deceleration settings
- 99 memory sets to quickly store and recall commonly used parameters
- FC5515R model has refrigeration capabilities from 40 °C to -20 °C
  - Cools down from 23 °C to 4 °C in less than 10 minutes
  - R290, an environmentally friendly coolant, contributes to the eco-friendliness of refrigerated centrifuges by minimizing their environmental impact and supporting efforts to combat global warming
  - Pre-cool feature quickly lowers the temperature of rotor and chamber before a run

Safety Features that Prevent Injury



- Motorized lid-locking system prevents centrifuge from opening during operation
- Rotor imbalance sensing systems stops the unit when it detects an imbalanced load
- Sealed and TÜV certified rotors to safeguard operators from harmful aerosols

Flexibility for Varied Centrifugation Needs



- Works with microtube rotors with different rotor capacity – 24 x 1.5/2.0 ml, 30 x 1.5/2.0 ml or 44 x 1.5/2.0 ml
- Compatible with 6 rotors (7 rotors on FC5515 model), including spin column rotor, hematocrit rotor, PCR Strips/tubes rotor and angle rotor for 5ml tubes
- An ergonomically designed rotors for microtubes, spin columns and PCR Stripes/tubes quickly and easily closes with 1/4 of a turn

FRONTIER™ 5515&5515R *High-Speed Micro Centrifuges*

Specifications

Model		FC5515		FC5515R	
Order No.		230V: 30130866	120V: 30130867	230V: 83042057	120V: 83042058
Speed Range		200 rpm – 15200 rpm; 10 rpm / increments			
Maximum RCF		21953 x g; 10 x g / increments			
Maximum Capacity (Rotor)		Angle Rotor: 44 x 1.5/2.0 ml			
Temperature Range		Air cooled		-20 °C to 40 °C, 1 °C/increments	
Refrigerant		N/A		R290 (Propane)	
Running Time		Quick Spin, 10 sec to 99 hr 59 min, or continuous			
Noise Level (depending on the rotor)		≤ 60 + 2 dB(A)		≤ 57 + 2 dB(A)	
Acc/Dec Levels		10/10			
Allowable Density at Maximum Speed		1.2 g/ml			
Allowable Kinetic Energy		7204 Nm			
AC Power		230 V/50-60 Hz	120 V/50-60 Hz	230 V/50-60 Hz	120 V/50-60 Hz
Voltage Fluctuation		± 10%			
Current Consumption		1.3 A	2.3 A	2.4 A	5.1 A
Power Consumption		270 W	280 W	500 W	560 W
Dimensions (W x D x H)		280 x 393 x 287 mm / 11.0 x 15.5 x 11.3 in		280 x 555 x 287 mm / 11.0 x 21.9 x 11.3 in	
Net Weight (without rotor)		16 kg / 35.3 lb		35 kg / 77 lb	
Shipping Dimensions (W x D x H)		410 x 540 x 400 mm / 16.1 x 12.3 x 15.7 in		390 x 690 x 390 mm / 15.4 x 27.2 x 15.4 in	
Shipping Weight (without rotor)		20 kg / 44 lb		44 kg / 97 lb	
Ambient conditions (EN/IEC 61010-1)	Environment	For indoor use only			
	Altitude	Use up to an altitude of 2000 m			
	Ambient temperature	5 °C up to 35 °C			
	Max. relative humidity	Max. relative humidity 80 % for temperatures up to 31 °C, Decreasing linearly to 50 % relative humidity up to 35 °C.			
EMC		EN/IEC 61326-1 Class B emissions, Basic immunity FCC Class B emissions			
Not suitable for use in hazardous environments.					

Accessories



Item number	30372717	
Description	Rotor Angle 44 x 1.5/2.0 ml V1	
Compatible with	FC5515	FC5515R
Max. Speed	15000 rpm	15000 rpm
Max. RCF	21127 x g / 21379 x g	21127 x g / 21379 x g

Accessories

Order No.	Description	Vol./Tube	Diameter	Tube type	No.of Tubes/Rotor
Without Adapter	Rotor Angle 44 x 1.5/2.0 ml V1	1.5/2.0 ml	11 mm	Microtube	44
30130885	Adapter 1 x 0.5 ml D8 mm, 6 pk	0.5 ml	8 mm	Microtube	44
30130884	Adapter 1 x 0.2/0.4 ml D6 mm, 6 pk	0.2/0.4 ml	6 mm	Microtube	44



Item No.	**30130872**	
Description	**Rotor Angle 30 x 1.5/2.0 ml**	
Compatible with	FC5515	FC5515R
Max. Speed	13500 rpm	13500 rpm
Max. RCF	19151 x g	19151 x g

Accessories

Order No.	Description	Vol./Tube	Diameter	Tube type	No.of Tubes/Rotor
Without Adapter	Rotor Angle 30 x 1.5/2.0 ml	1.5/2.0 ml	11 mm	Microtube	30
30130885	Adapter 1 x 0.5 ml D8 mm, 6 pk	0.5 ml	8 mm	Microtube	30
30130884	Adapter 1 x 0.2/0.4 ml D6 mm, 6 pk	0.2/0.4 ml	6 mm	Microtube	30



Item number	**30642371**	
Description	**Rotor Angle 24 x 1.5/2.0 ml BIOSEALS V2**	
Compatible with	FC5515	FC5515R
Max. Speed	15200 rpm	15200 rpm
Max. RCF	21953 x g	21953 x g

Accessories

Order No.	Description	Vol./Tube	Diameter	Tube type	No.of Tubes/Rotor
Without Adapter	Rotor Angle 24 x 1.5/2.0 ml BIOSEALS V2	1.5/2.0 ml	11 mm	Microtube	24
30130885	Adapter 1 x 0.5 ml D8 mm, 6 pk	0.5 ml	8 mm	Microtube	24
30130884	Adapter 1 x 0.2/0.4 ml D6 mm, 6 pk	0.2/0.4 ml	6 mm	Microtube	24



Item number	**30130873**	
Description	**Rotor Angle 12 x 5 ml FA**	
Compatible with	FC5515	FC5515R
Max. Speed	14500 rpm	14500 rpm
Max. RCF	19978 x g	19978 x g

Accessories

Order No.	Description	Vol./Tube	Diameter	Tube type	No.of Tubes/Rotor
Without Adapter	Rotor Angle 12 x 5 ml FA	5 ml	17 mm	Microtube	12
30130886	Adapter 1 x 1.5/2.0 ml D11 mm, 6 pk	1.5/2.0 ml	11 mm	Microtube	12
30130887	Adapter 1 x 1 ml D12.6 mm Cryo, 6 pk	1 ml	12.6 mm	Cryo Tube - Flat Bottom	12
30130888	Adapter 1 x 1.8 ml D12.6 mm Cryo, 6 pk	1.8 ml	12.6 mm	Cryo Tube - Round Bottom	12

Distributed by:
Safety Emporium
PO Box 1003
Blackwood, NJ 08012
Ph: (866) 326-5412 toll-free
Fax: (856) 553-6154
esupport@safetyemporium.com
www.safetyemporium.com



Item number	**30130874**	
Description	**Rotor Angle 4 x 8-Place PCR Strip**	
Compatible with	FC5515	FC5515R
Max. Speed	15000 rpm	15000 rpm
Max. RCF	15343 x g	15343 x g

Accessories

Order No.	Description	Vol./Tube	Diameter	Tube type	No.of Tubes/Rotor
Without Adapter	Rotor Angle 4 x 8-Place PCR Strip	0.2/0.4 ml	-	8-w PCR Strip	32



Item number	**83041007**	
Description	**Rotor Hematocrit 24 x Capillaries V2**	
Compatible with	FC5515	FC5515R
Max. Speed	13000 rpm	-
Max. RCF	16058 x g	-

Accessories

Order No.	Description	Vol./Tube	Diameter	Tube type	No.of Tubes/Rotor
Without Adapter	Rotor Hematocrit 24 x Capillaries V2	-	1.9 mm	Capillaries	24



Item number	**83041050**	
Description	**Rotor Angle 24 x 2.0 ml Spin Column V1**	
Compatible with	FC5515	FC5515R
Max. Speed	13500 rpm	13500 rpm
Max. RCF	17317 x g	17317 x g

Accessories

Order No.	Description	Vol./Tube	Diameter	Tube type	No.of tubes/rotor
Without Adapter	Rotor Angle 24 x 2.0 ml Spin Column V1	2 ml	11	Spin Column	24

Shortcut list:

ID – auto rotor identification
FA – Conical bottom / Falcon®
Hi – version with higher speed
FB – Flat bottom
Vac – Vacutainer®
RB – Round bottom
Sar – Sarstedt
Rim – Skirted conical bottom

Distributed by:
Safety Emporium
PO Box 1003
Blackwood, NJ 08012
Ph: (866) 326-5412 toll-free
Fax: (856) 553-6154
esupport@safetyemporium.com
www.safetyemporium.com

FRONTIER™ 5515&5515R *High-Speed Micro Centrifuges*

Other Standard Features and Equipment

Microprocessor control, Imbalance switch-off, Audible signal at the end of each run with melody options, Emergency release, 99 memory sets, Ten acceleration and ten deceleration rates, Pre-selection of running time from 10 sec to 99 hr 59 min or continuous, Quick spin for short runs.

Compliance

See Declaration of Conformity available CE Declarations | OHAUS

Outline Dimensions

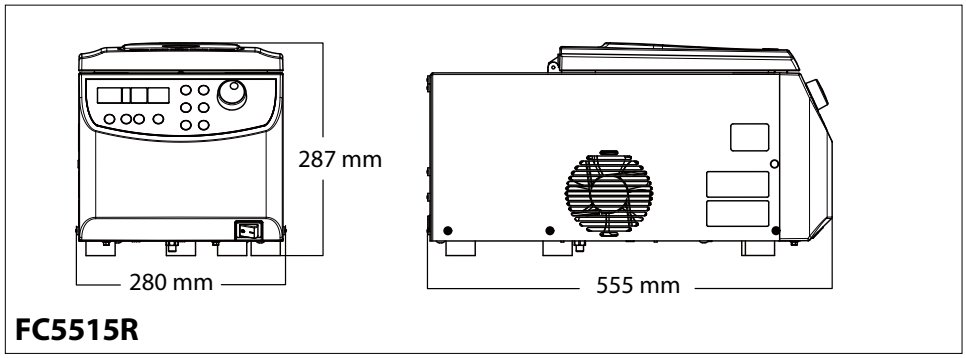

FC5515R

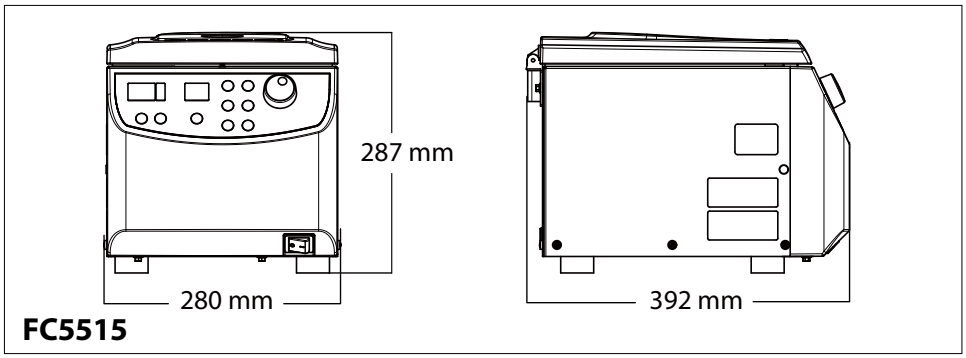

FC5515

Distributed by:
Safety Emporium
PO Box 1003
Blackwood, NJ 08012
Ph: (866) 326-5412 toll-free
Fax: (856) 553-6154
esupport@safetyemporium.com
www.safetyemporium.com

30774783_D 20250829 © Copyright OHAUS Corporation

OHAUS CORPORATION

Tel: 800.672.7722
973.377.9000
Fax: 973.944.7177

www.ohaus.com

The management system governing the manufacture of this product is ISO 9001:2015 certified.

Click or scan for the web

OHAUS®